3RD ANGLE PROJECTION | DO NOT SCALE | DENOTES LATEST ISSUE CHANGES | DENOTES CRITICAL VALUE

© 2019 A3 THIS DOCUMENT MUST NOT BE COPIED OR DISCLOSED TO A THIRD PARTY WITHOUT THE WRITTEN CONSENT OF PANORAMA ANTENNAS LTD.

| TOLERANCES UNLESS OTHERWISE STATED | | | |
|---|---|---|---|
| 0 DEC. PLACE | ±0.5 | 2 DEC. PLACES | ±0.1 |
| 1 DEC. PLACE | ±0.2 | ANGULAR | ±1° |

**OPERATING FREQUENCIES:**

2G/3G/4G: 698-960 / 1710-3800 MHz
WIFI: 2.4 / 5.0 GHz
GPS/GNSS: 1562-1612 MHz 26dB LNA

**CA**

DWG. No. SH-IN2440-VAR

| PART No. | COLOUR | EXT. CABLES |
|---|---|---|
| SH-IN2440-LC | JET BLACK (RAL 9005) | CABLE + HSS LOOSE |
| SH-IN2440-W-LC | SIGNAL WHITE (RAL 9003) | CABLE + HSS LOOSE |

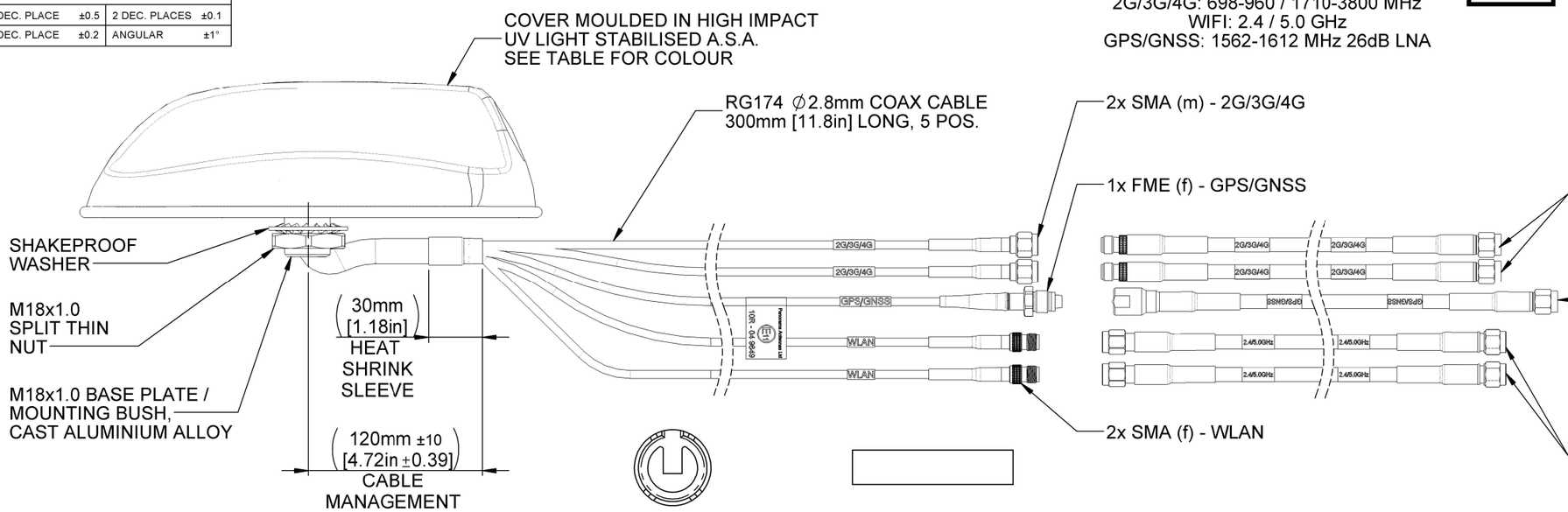


**2x C29SP-5SJ-CELL**
CS29 CABLE 5m [16.4ft] LONG,
WRAPTOR LABELS - "2G/3G/4G"
YELLOW, WHITE TEXT 2 POS. EACH CABLE.

**1x C23FP-5SP-GNSS**
CS23 CABLE 5m [16.4ft] LONG,
WRAPTOR LABELS - "GPS/GNSS"
BLACK, WHITE TEXT 2 POS.

**2x C32SP-5SMARV-WIFI**
CS32 CABLE 5m [16.4ft] LONG,
WRAPTOR LABELS - "2.4/5.0 GHz"
RED, WHITE TEXT 2 POS. ON EACH CABLE.

⚠ ANY PACKING AND LABELLING REQUIREMENTS MUST BE FOLLOWED

**CA**

| PART No. | COLOUR | EXT. CABLES |
|---|---|---|
| SH-IN2440 | JET BLACK (RAL 9005) | CABLE + HSS FITTED |
| SH-IN2440-W | SIGNAL WHITE (RAL 9003) | CABLE + HSS FITTED |

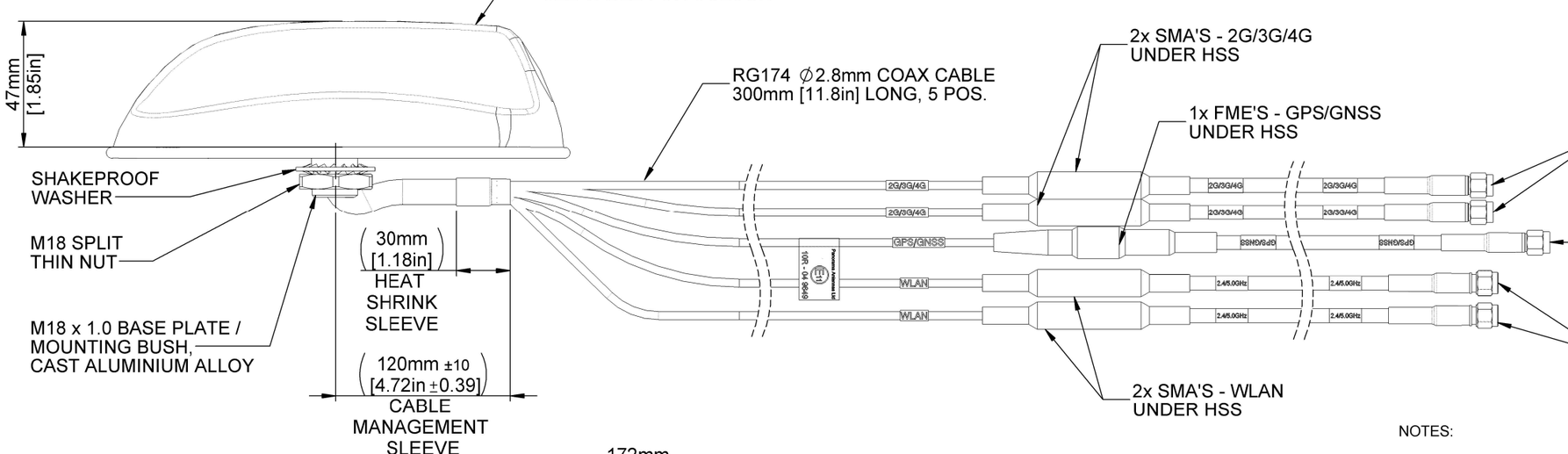


**2x C29SP-5SJ-CELL**
CS29 CABLE 5m [16.4ft] LONG,
WRAPTOR LABELS - "2G/3G/4G"
YELLOW, WHITE TEXT 2 POS. EACH CABLE.

**1x C23FP-5SP-GNSS**
CS23 CABLE 5m [16.4ft] LONG,
WRAPTOR LABELS - "GPS/GNSS"
BLACK, WHITE TEXT 2 POS.

**2x C32SP-5SMARV-WIFI**
CS32 CABLE 5m [16.4ft] LONG,
WRAPTOR LABELS - "2.4/5.0 GHz"
RED, WHITE TEXT 2 POS. ON EACH CABLE.

NOTES:

1. SAMPLES MUST BE APPROVED BY PANORAMA ANTENNAS Q.C. BEFORE COMMENCING PRODUCTION.
2. ALL MATERIALS SUPPLIED MUST BE RoHS3 (DIRECTIVE (EU) 2015/863) COMPLIANT AND MUST NOT CONTAIN ANY SUBSTANCES OF VERY HIGH CONCERN (SVHCs) LISTED UNDER REACH OR POLY-AROMATIC HYDROCARBONS (PAHs), OR PERSISTENT ORGANIC POLLUTANTS (POPs) CONTROLLED BY THE STOCKHOLM CONVENTION.

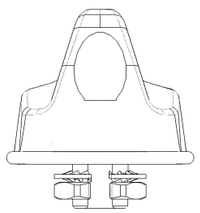

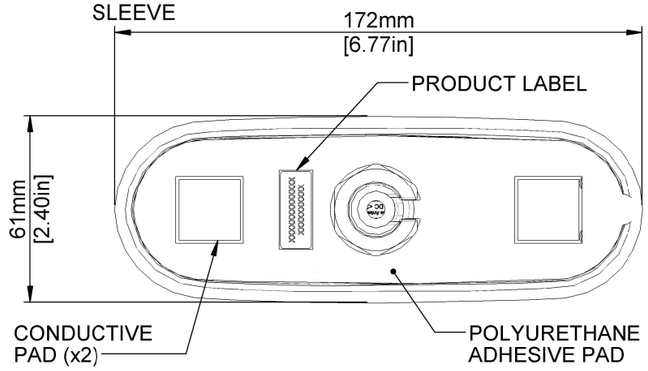


**1x EARTH WASHER SUPPLIED LOOSE**

| PCN | REV. | DESCRIPTION | DATE | DRN. |
|---|---|---|---|---|
| 01019 | A | INITIAL ISSUE | 22/08/2019 | CL |

PRODUCT/ASSEMBLY: 1012 - MIMO & DIVERSITY ANTENNAS
MATERIAL: N/A
FINISH: N/A
WEIGHT 1300 (net) g
SHEET 1 OF 2

DESCRIPTION: 5 IN 1 SHARKFIN - BLACK OR WHITE - FITTED OR LOOSE EXTENSION CABLES

| APPROVED | D.O. CHECK | SCALE | DIMENSIONS IN mm |
|---|---|---|---|
| JJ | JJ | 1:2 | |

PANORAMA ANTENNAS