TEST CONDITION[1W,0.5M,2V]

X:475.00Hz Y:7.097mΩ ZB:Live Curve SSR Fund.

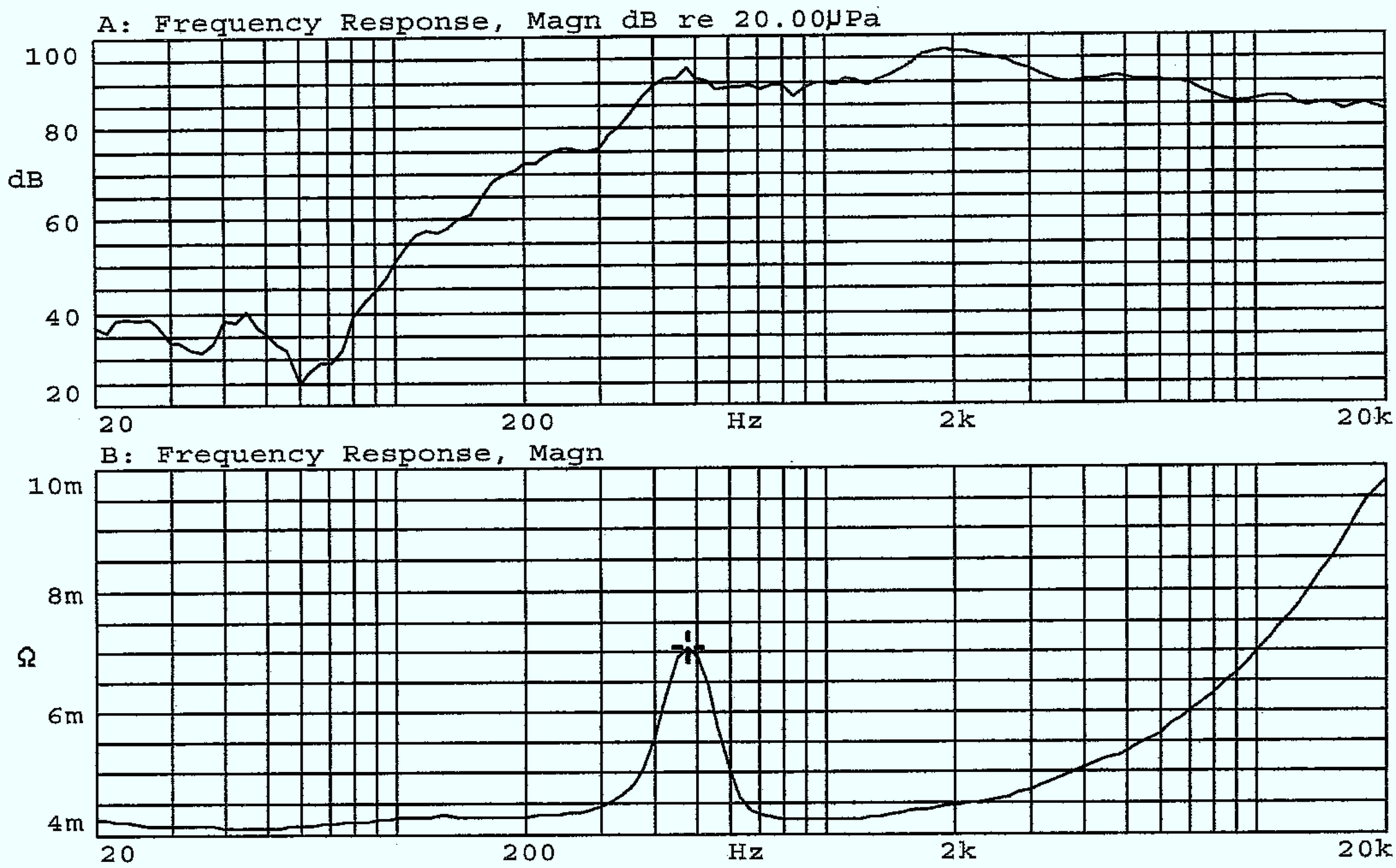

14-JAN-2008 16:36:36

Mode: SSR

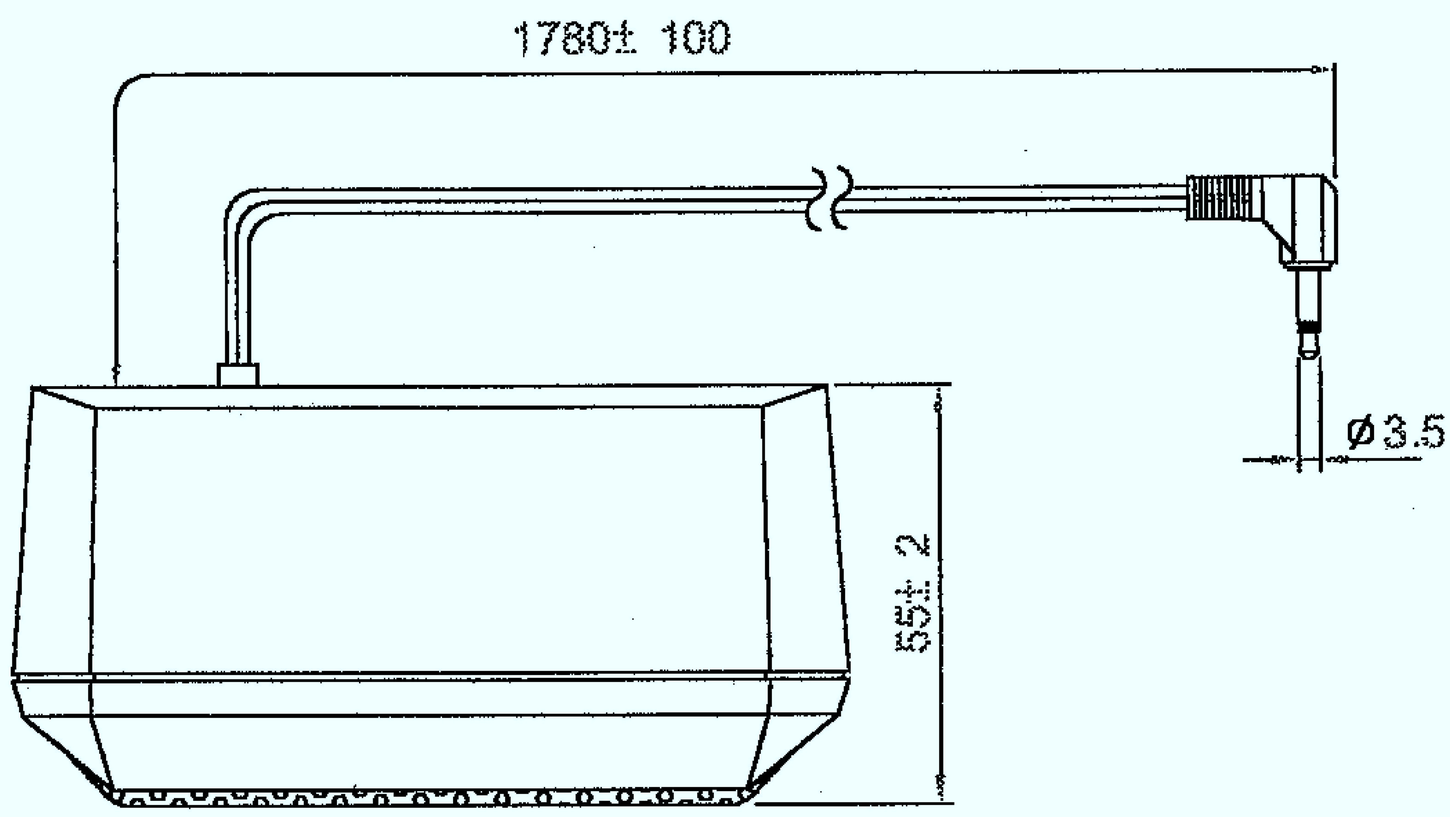

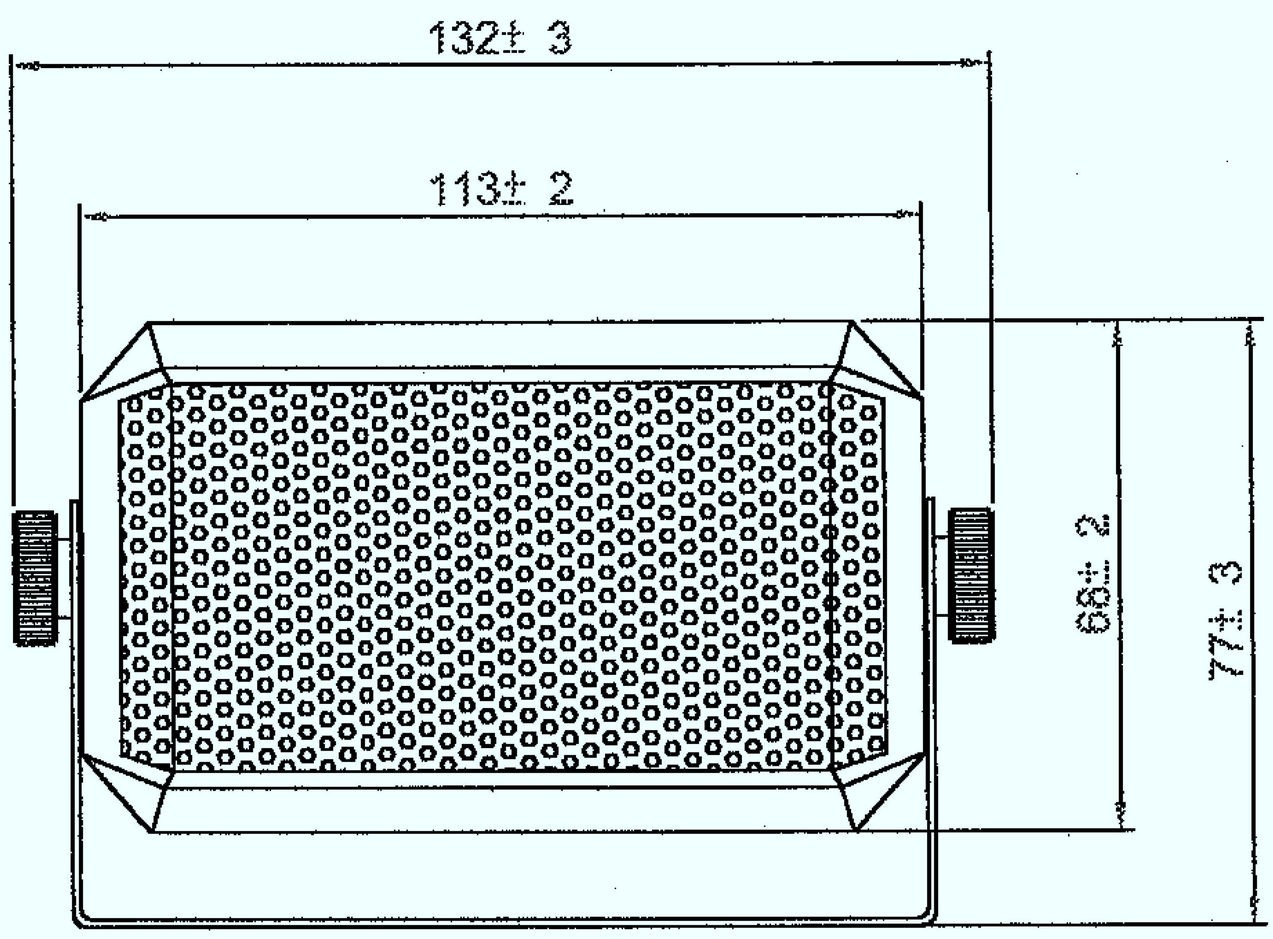
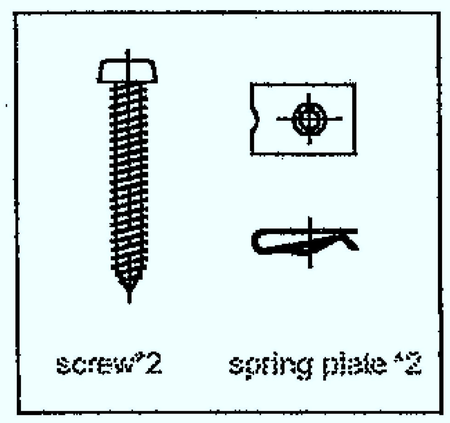
screw accessories for fixing bracket